ARRA INC.
ANTENNA & RADOME RESEARCH ASSOCIATES
Tel 516-231-8400 Fax 516-434-1116

BROADBAND PHASE SHIFTERS

DC-18.0 GHz

Model 9426A

Model D6426E

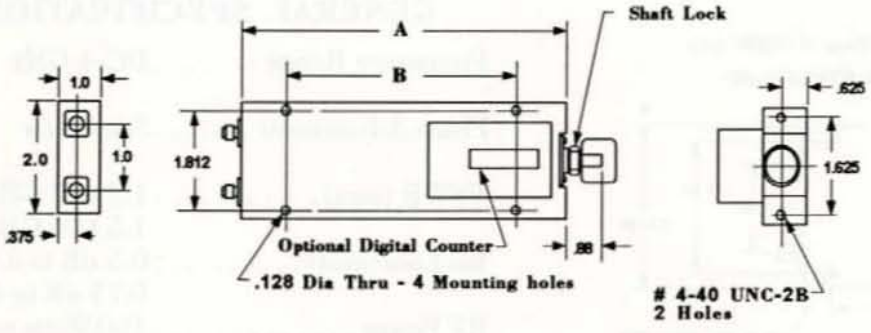

Form Factor	
SMA	0-2704
Type N	0-2815

GENERAL SPECIFICATIONS

Frequency Range . . . . . DC-18 GHz
Phase Adjustment . . . . . See below
VSWR (max) . . . . . 1.3 to 4 GHz
1.5 to 12 GHz
1.6 to 18 GHz
Ins Loss (max) . . . . . 0.5 dB to 8 GHz
0.75 dB to 12 GHz
1.0 dB to 18 GHz
RF Power . . . . . 100 Watts average
5 kW peak

Connectors . . . . . SMA Female standard
Control . . . . . 1/4 " Non-Translating Shaft
Material :
Body . . . . . Aluminum
Connectors . . . . . Stainless Steel
Mounting Provisions . . . . . 4 thru holes
2 tapped holes
Finish . . . . . ARRA Blue per MIL-C-22750

Frequency Range (GHz)	Insertion Delay (Approx) nsec	Min Phase Adjustment	Dimensions - Inches		Model No.*
			A	B	
DC-18.0	0.88 min 1.10 max	60° / GHz 360° at 6 GHz	5.50	3.625	9426A
DC-18.0	0.68 min 0.78 max	30° / GHz 180° at 6 GHz	3.75	1.875	9426B
DC-12.0	1.20 min 1.49 max	90° / GHz 540° at 6 GHz	8.00	6.125	6426E

* To specify Type N connectors, contact factory.
For calibrated digital readout, precede model number with D. Ex: D9426B
(Digital Readout in 0.1° increments. Calibration accuracy ±0.7°/GHz)